DRAWING NO.
DCAJ418

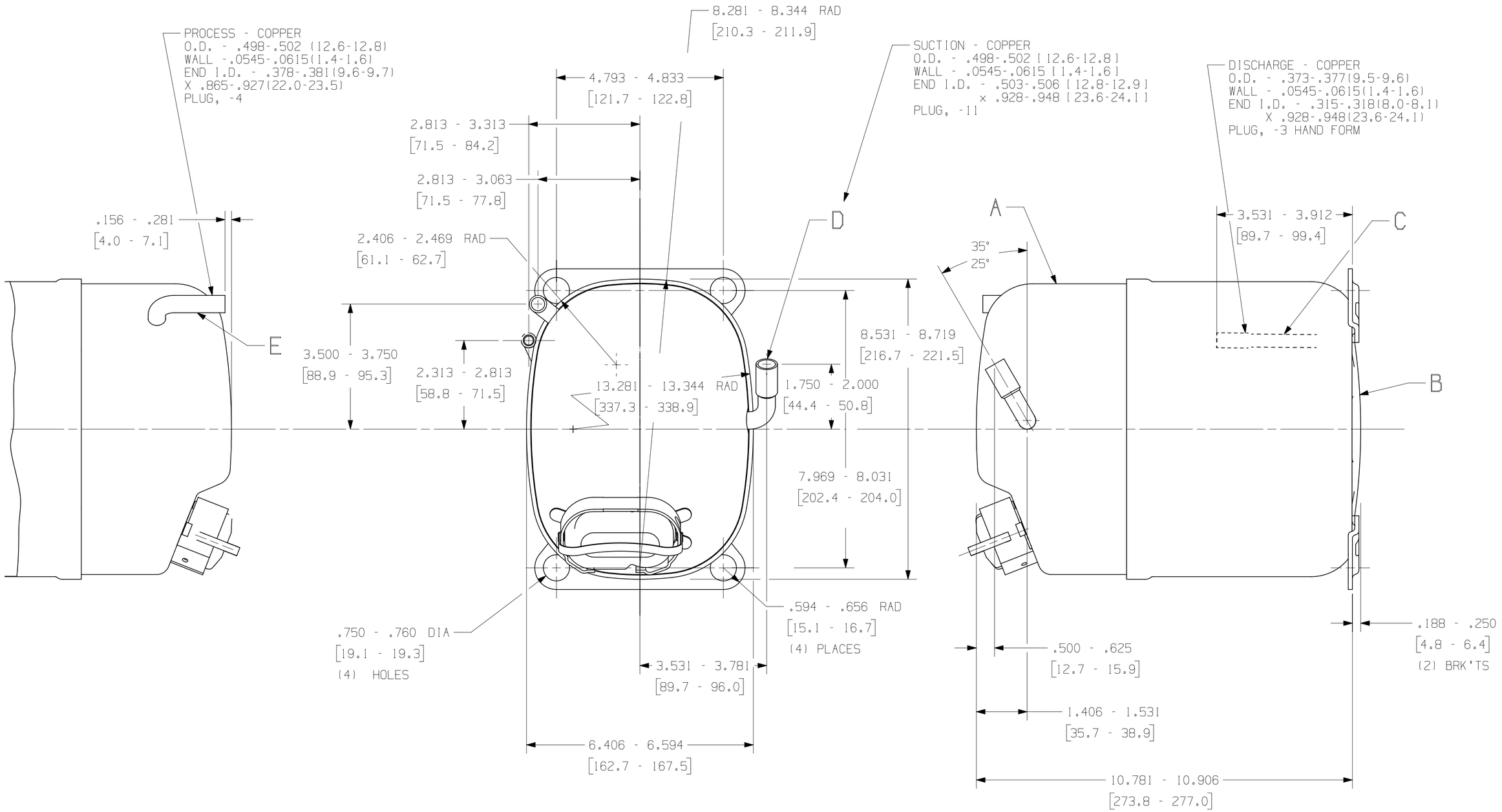

NOTES:

1. IF SPECIFIED ON BILL OF MATERIAL ASSEMBLE THESE PARTS AS SHOWN.
2. SEE SPEC. "A-B" & "A-C" FOR PROCESSING.
3. MUST COMPLY WITH T.P.Co. GLOBAL SPEC 08.

3D,VNX6

ENGLISH

Q.A. SYMBOLS

★ = CATEGORY I
▲ = CATEGORY II
■ = CATEGORY III
= CATEGORY IV

AJ

NOTE:

1. SEE DWG. #AHT-3 FOR ASSEMBLY OF DISCHARGE CONNECTOR AND LOWER SHOCK LOOP IN LOWER HOUSING.

A	HA635-21
B	HA 705-03
C	34591
D	34367
E	34372

(E)

LT	LC	CHANGE	DATE	
F	-	EC21471 REDRAWN IN 3D NO CHANGE ADDED GLOBAL SPEC 08	TS 03DEC09	
E	6A	#228106-1 REMOVED HA-536-118 & HA-535-11	N.L.C. 8-14-95	
D	—	REDRAWN NO CHANGE ON TO CAD #224987	HMB 3/4/92	

THIS DRAWING OR PRINT IS THE PROPERTY OF TECUMSEH PRODUCTS COMPANY (TECUMSEH) AND CONTAINS INFORMATION BELONGING TO TECUMSEH. ALL PARTIES MADE AVAILABLE TO THE RECEIVER OF THIS DRAWING OR PRINT SPECIFIC CONDITION THAT NEITHER IT NOR THE INFORMATION THEREON SHALL BE DISCLOSED OR MADE AVAILABLE TO ANY OTHER PERSONS OR PARTIES WITHOUT SPECIFIC WRITTEN CONSENT OF TECUMSEH EXPRESSLY SUCH INFORMATION ONLY AS MAY BE NECESSARY TO OBTAIN APPROVED IN WRITING BY TECUMSEH AND NOT OTHERWISE. IT IS ALSO NOT TO BE COPIED OR DUPLICATED IN ANY MANNER WHATSOEVER WITHOUT THE EXPRESS WRITTEN CONSENT AND PRIOR SPECIFIC WRITTEN CONSENT AND PRIOR WRITTEN CONSENT OF TECUMSEH AT THE TECUMSEH, MICHIGAN, ADDRESS SHOWN BELOW. ANY RECIPIENT HAVING RECEIVED THIS DRAWING OR PRINT AFTER SUCH REQUEST SHALL COMPLY WITH THE ABOVE.

DIS.CODE 34D

DO NOT SCALE THIS DRAWING ALL FERROUS MATERIALS MUST NOT BE MAGNETIC AS RECEIVED OR AT COMPRESSOR ASSEMBLY.

NAME: SALES COMPRESSOR

DWN.	CK.	APR.	SCALE
BRODERICK 3/4/92	M'COUGHEY 8-15-95	BLANDEN	1:2

TECUMSEH COMPRESSOR CO.
TECUMSEH, MICHIGAN

MATERIAL: ---------

THIS PRINT SUPERSEDES ALL PRINTS PRIOR TO

DRAWING NO. DCAJ418

BANNER